123N NASQAR

(123N)

Build Guide

(26.01.30.02)

WARNING! **DO NOT** leave this kit, assembled or unassembled, in a hot motor vehicle or any other high temperature environment. This kit is 3D printed and high temperatures will harm or destroy the components.

Team QIK Build Guide

TEAM QIK PARTS

- ☐ 123N-11 Chassis
- ☐ 123-12 Servo Keeper
- ☐ 12-13 Side Link (2)
- ☐ 12-14 Center Post
- ☐ 12-15 Side Arms (left & right)
- ☐ 12-16 Damper Set (3)
- ☐ 123N-17 Front Body Post Mount
- ☐ 123N-17-R Front Body Post Riser
- ☐ 123N-18 Body Post Sleeve Set (2)
- ☐ 12-18T Body Post Sleeve Cap (TPU) (6)
- ☐ 123N-19 Body Post Set (2)
- ☐ 123N-19E Body Post Extension
- ☐ 123-21 Pod
- ☐ 123-22 Carrier (2)
- ☐ 123-23 Top Brace
- ☐ 123-24 Damper Mount
- ☐ 12-25 Lower Spindle (2)
- ☐ 12-26 Rear Ride Height Shim Set (2)
- ☐ 12-28 Motor Plate
- ☐ 123-31 Rear Hub Set
- ☐ 123-32 Spur Disk
- ☐ 12-33 Rear Axle Shim (2)
- ☐ 12-34 Rear Axle
- ☐ 12-35 Rear Axle Plug (2)
- ☐ 12-42 Center Link (2 dot medium)
- ☐ 12-51-22 Front Arms (Left & Right)
- ☐ 12-52 Front Ride Height Shim Set (2)
- ☐ 12-53 Front Rocker & Cradle Set (2)
- ☐ 12-54 Front Axle Adaptor (2)

- ☐ 12-55-4 Toe Link Set (Left & Right)
- ☐ 12-56 Front Hubs (Left & Right)
- ☐ 12-57 Bump Shim (2)
- ☐ 12-58 114 Servo Saver Bushing (1)
- ☐ 123L-62 Front Wire Keeper
- ☐ 12-103 Battery Strap Rubber Ring (1)
- ☐ 12-104 Servo (Yeah Racing YE-0030 Micro Servo)
- ☐ 12-105 Servo Saver (Kimbrough #114)

Make it a 123Q with the following QHR Completion Kit…
NRC QHR Completion Kit (Sold Separately)

- ☐ 12-108 HW 1625 Brushed ESC
- ☐ 12-110 48P 25T Pinion Gear
- ☐ Gravity Wheels & Tires
- ☐ NRC 35, 45, 55 Class Motors
    - ☐ 12-107-35 APEX 55T Brushed Motor
    - ☐ 12-107-45 APEX 45T Brushed Motor
    - ☐ 12-107-55 APEX 55T Brushed Motor

BODY (sold separately)
- ☐ NASQAR or NAS-TruQ Body (clear uncut & unpainted)

OPTIONAL PARTS

FAN
- ☐ 12-65 Fan Guard
- ☐ 12-86 Fan
- ☐ M3x25 BH (2)
- ☐ 123F-31 POD

STAND
- ☐ 123N-92 Stand

Keepers, Cleanup, & Make IT Easy items
- ☐ 12-61 HW 1S ESC Cap Keeper
- ☐ 12-64 Side Wire Keeper (2)
- ☐ 12-68-1500 Battery Box
- ☐ 12-91 Easy Setup Ride Height Gauge
- ☐ 123N-93 Body Template

HARDWARE

M3 Button Head Screws (BH)

- ☐ M3x6 BH (2)
- ☐ M3x8 BH (8)
- ☐ M3x10 BH (16)
- ☐ M3x12 BH (2)
- ☐ M3x16 BH (9)
- ☐ M3x25 BH (6)
- ☐ M3x30 BH (2)

M3 Flat Head Screws (FH)

- ☐ M3x8 FH (1)
- ☐ M3x10 FH (6)
- ☐ M3x12 FH (6)
- ☐ M3x16 FH (6)
- ☐ M3x20 FH (2)
- ☐ M3x25 FH (1)
- ☐ M3x30 FH (2)

M3 Cap Head Screws (CH)

- ☐ M3x10 CHR (6)

M3 Set Screws (SS)

- ☐ M3x10 SS (6)

M3 Washers, Nuts & Other

- ☐ M3 NyLoc (14)
- ☐ M3 Nut (2)
- ☐ M3x0.5 FW (10)
- ☐ M3x5.5x7 TB (11)
- ☐ M3x5.5 BT (4)
- ☐ M3x12 FW (1)

M4 Flat Head Screws

- ☐ M4x12 FH (4)

Bearings & More

- ☐ 6x10x3 FMB (2)
- ☐ 3/16 x 5/16 x 1/8 FMB (4)
- ☐ 3x25 SP (5)
- ☐ 3x5x5 SB (10)
- ☐ Small ZT (2)
- ☐ BC (4)
- ☐ RB (20)

HARDWARE KEY

TB = Threaded Ball
BT = Ball Tube
BH = Button Head Screw
FH = Flat Head Screw
CH = Cap Head Screw
CHR = Reduced Size Cap Head Screw
FW = Flat Washer
NyLoc = Nylon Locking Hex Nut
FMB = Flanged Metal Bearing
SP = Steal Pin
SB = Sleeve Bearing
RB = Rubber Band
SS = Set Screw
ZT = Zip-Tie
BC = Body Clip

DAMPER MOUNT

Hardware for this section:
M3x16 FH (2) - damper mount outer posts
M3x25 FH (1) - damper mount center post
M3 NyLoc (3) - damper mount all 3 posts

Damper Mount	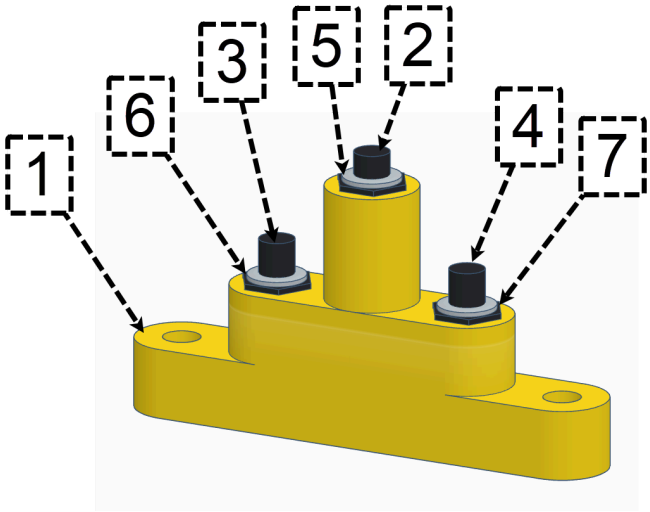
PARTS	1. Damper Mount 2. M3x25 FH 3. M3x16 FH 4. M3x16 FH 5. M3 NyLoc 6. M3 NyLoc 7. M3 NyLoc
Assembly STEPS	
1	Assemble as shown

POD

Hardware for this section:
M3x10 BH (2) - motor plate
6x10x3 FMB (2) - flanged bearing... insert an axle bearing into each rear carrier
M3x25 FH (4) - carriers to pod
M3 NyLock (4) - carriers top
M3x16 FH (2) - top brace to carriers (barely snug)
M3x16 BH (2) - damper mount to pod
M3x0.50 FW (2) - damper mount to pod

STEP 1 1. Pod 2. Motor Plate 3. M3x10 BH 4. M3x10 BH Attach motor plate to pod as shown	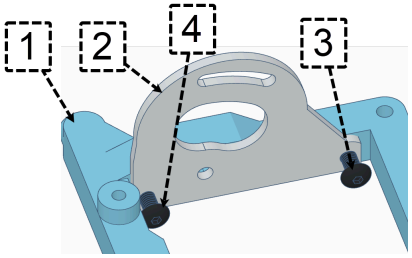
STEP 2 1. Pod 2. Carrier (2) 3. Rear Ride Height Shim (2) (use the 2 dot shim to start with) 4. M3 NyLoc (4) 5. M3x25 FH (4) Attach carriers to pod as shown	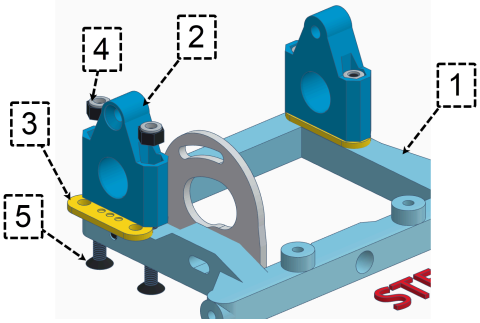
STEP 3 1. Top Brace 2. M3x16 FH 3. M3x16 FH Attach top brace to carriers as shown. Tighten screws to just snug, not tight.	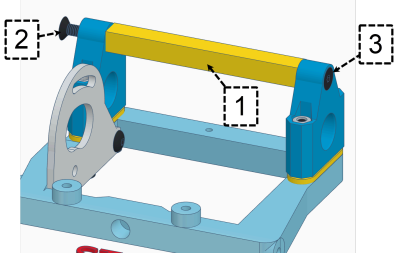
STEP 4 1. Assembled Damper Mount 2. M3x16 BH 3. M3x16 BH 4. M3x0.50 FW 5. M3x0.50 FW Attach the assembled damper mount to the pod as shown.	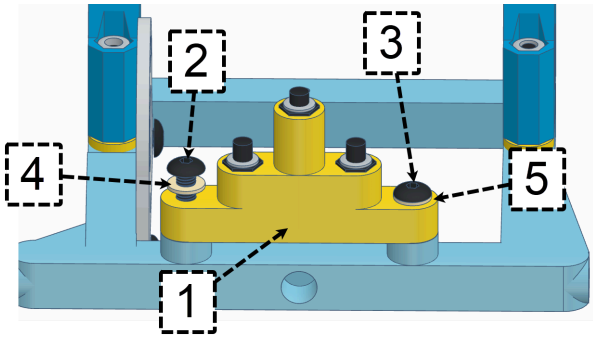

REAR SPOOL ASSEMBLY into/onto POD

Hardware for this section:
M3x10 SS (6)
M3x10 FH (3)
6x10x3 FMB (2) - bearings to be inserted into carriers

Spool Assembly

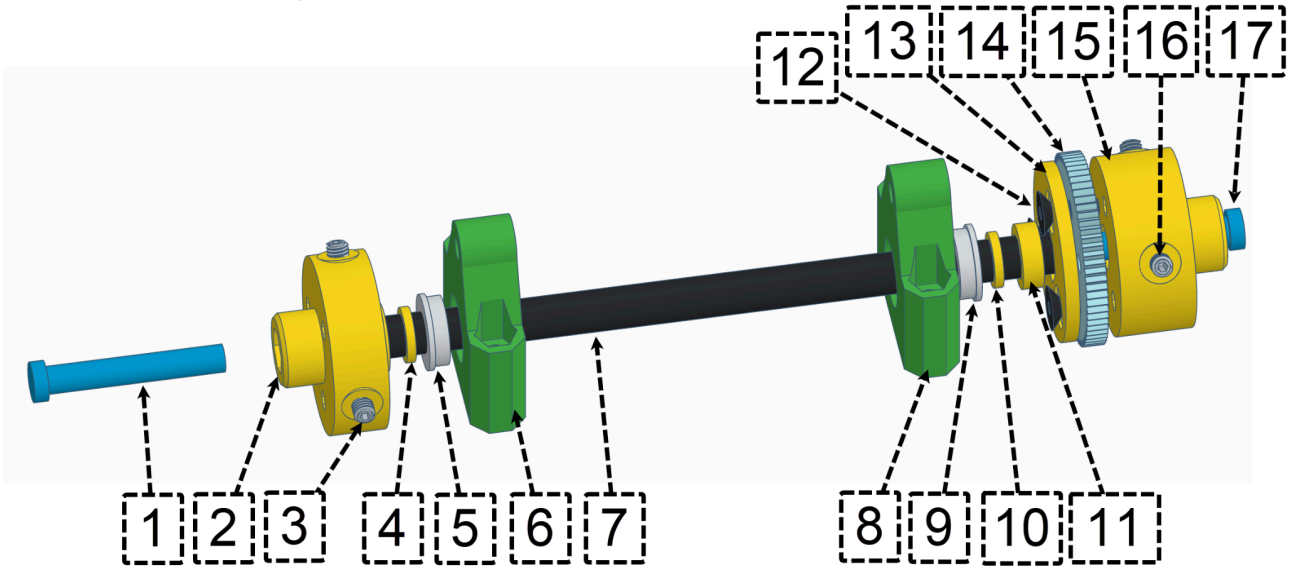

1. Axle Plug
2. Hub (left)
3. M3x10 SS (3)
4. 1 mm Shim
5. Bearing - (should be inserted into carrier already attached to pod)
6. Carrier - (already attached to pod)
7. Axle
8. Carrier - (already attached to pod)
9. Bearing - (should be inserted into carrier already attached to pod)
10. 1 mm Shim
11. 3mm Thick Shim
12. M3 x 10 FH (3)
13. Spur Disk
14. Spur Gear (already attached to right hub)
15. Hub (right)
16. M3x10 SS (3)
17. Axle Plug

STEPS

1. Before assembling the spool, the carriers (#6 and #8) must be attached to the pod
2. Attach spur gear to the right hub using 3 M3x8 FH snugly without over tightening
3. Insert axle plugs into each end of the axle
4. Insert bearings (#5 & #9) into carriers (#6 & #8) on pod
5. Insert a left hub (#2) onto the left end of the axle (#7), flush on the left

6. Screw 3 M3x10 SS (#3) into the left hub and snug them to the axle
7. Add a 1mm shim (#4) to the axle
8. Insert axle from left side, through bearing (#5) in left carrier, and through bearing (#9) in the right carrier of the pod
9. Slide a 1mm shim (#10) onto axle
10. Slide the 3mm thick shim (#11) onto the axle
11. Slide right hub (#15) with spur disk (#13) and spur gear (#14) attached onto the axle
12. Do not push the right end tightly, leave just a fraction of a mm of end play for the axle to not bind on the bearings
13. Screw 3 M3x10 SS (#16) into the right hub and snug them to the axle

CENTER POST

Hardware for this section:
M3x10 FH (1) - center post to center link
M3 NyLoc (1) - center post

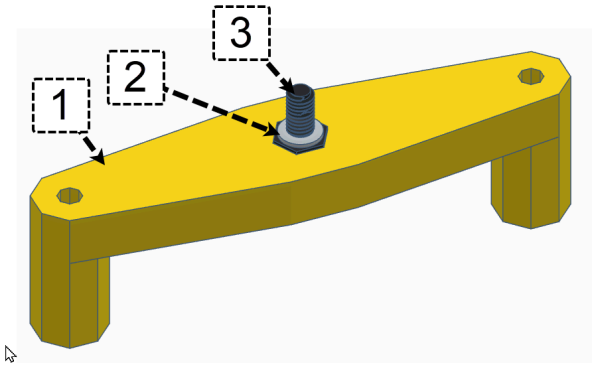

1. Center Post
2. M3 NyLoc
3. M3x10 FH

Assemble as shown.

SIDE ARMS

Hardware for this section:
M3 NyLoc (2) - side arms
M3x10 FH (2) - side arms
M3x12 FH (4) - side arms to chassis

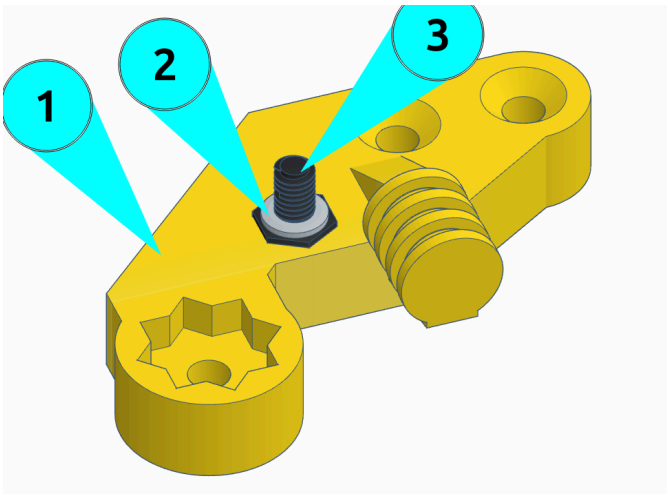

1. Side Arm (left shown)
2. M3 NyLoc (2) - 1 per side arm
3. M3x10 FH (2) - 1 per side arm

Assemble the left side arm as shown.
Repeat for right side arm (not shown)

CHASSIS PIVOT BALL

Hardware for this section:
M3x8 FH (1) - rear pivot ball (use a little blue locktite)
M3x5.5x7 TB (1) - rear pivot ball

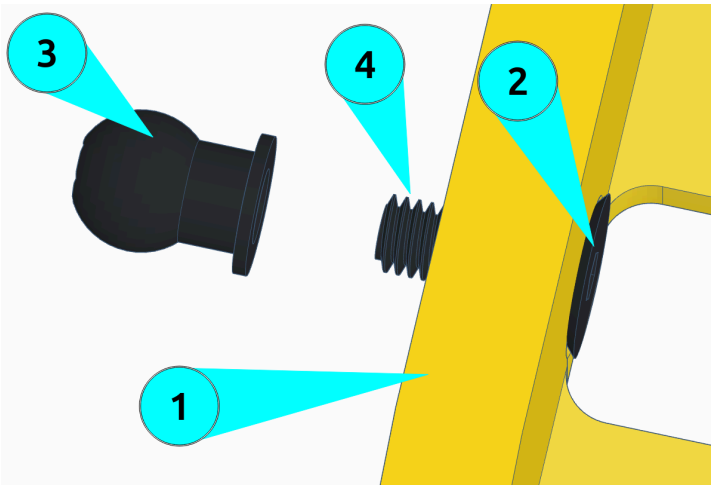

1. Chassis
2. M3x8 FH
3. M3x5.5x7 TB
4. Placement of blue thread lock paste

Assemble as shown

CENTER POST to CHASSIS

Hardware for this section:
M3x20 FH (2) - center post to chassis

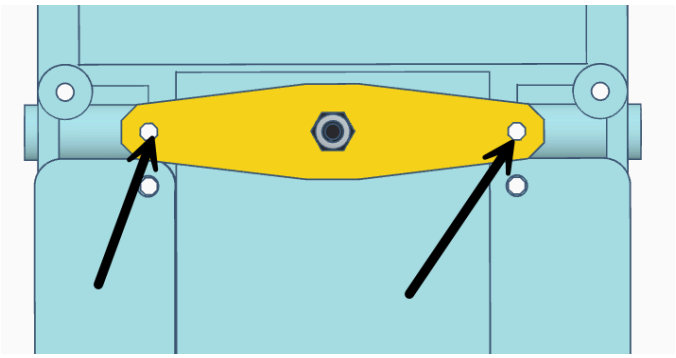

Attach center post assembly to chassis using 2 each M3x20 FH through the bottom of chassis up into center post assembly. Placement on chassis as shown above.

FRONT HUBS

Hardware for this section:
3x5x5 SB (4) - insert 2 per hub
M3 Nut - (2) - front hubs
M3x.50 FW (4) - 2 per axle on inside next to BH head (narrow front end)
M3x30 BH (2) - front axles
RB (6) - place the rockers into place and add 3 RB to each rocker
3/16 x 5/16 x ¼ FMB (4) - 2 per axle
M3 NyLoc (2) - front wheel nut

Front Hub	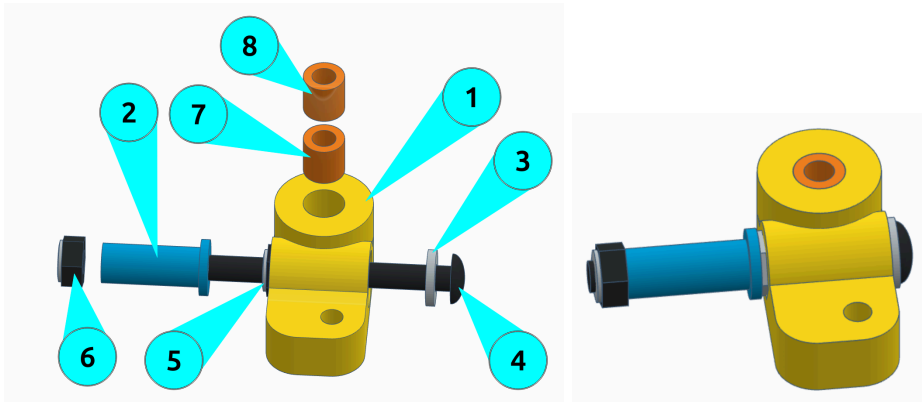
PARTS	1. Front Hub 2. Front Axle Adaptor 3. M3x0.5 FW (Use 2, only 1 shown in photo) 4. M3x30 BH (axle) 5. M3 Nut 6. M3 NyLoc 7. 3x5x5 SB 8. 3x5x5 SB
Assembly STEPS:	
1	Press the 2 3x5x5 SB (#7 & #8) into front hub (#1) from top until flush
2	Assemble items #4, #3, #3, #1, #5 and tighten, use 2 FW (#3) whereas only 1 is shown
3	Thumb thread front axle adaptor #2 onto axle
8	Repeat for right side

FRONT ARMS

Hardware for this section:
3x25 SP (2) - king pins into front arms
M3x8 BH (2) - front arm to hold kingpin (tighten to German specifications --> Güd-n-tight)
M3x0.5 FW (2) - droop limit on kingpin

Front Arm & Kingpin	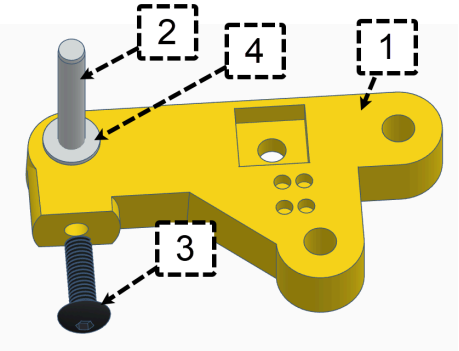
PARTS	1. Front Arm 2. 3x25 SP (kingpin) 3. M3x8 BH to secure kingpin 4. M3x0.5 FW
Assembly STEPS:	
1	☐ Press SP (kingpin) into arm until flush on bottom 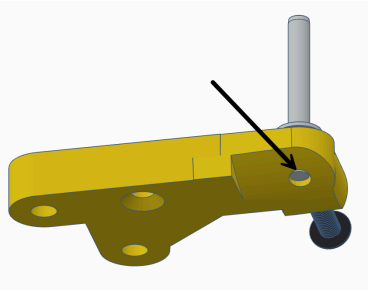
2	☐ Insert BH to secure kingpin
3	☐ Place a M3x0.5 FW (#4) onto kingpin (shiniest and smoothest side up) ☐ More FWs may be added later for more droop limit if desired. We recommend starting with one FW per arm.

CRADLE to ARM

Hardware for this section:
M3x12 FH (2) - rockers to arms

Rocker & Cradle	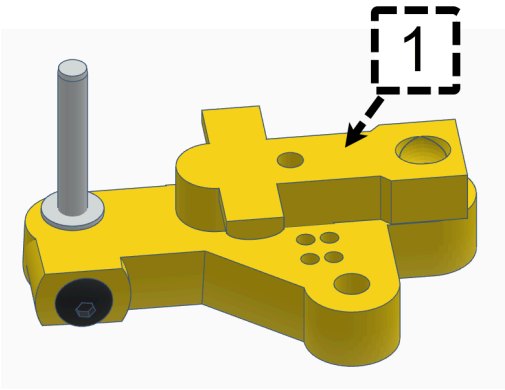	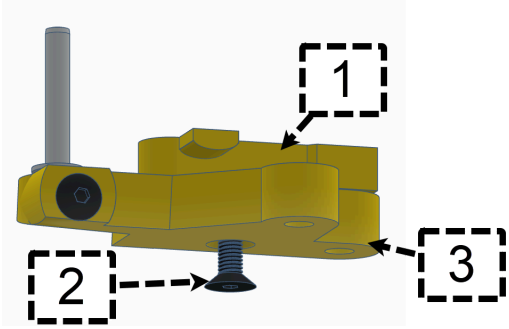
PARTS	1. Cradle 2. M3x12 FH 3. Arm	
Assembly STEPS:		
1	Install M3x12 FH through bottom of the arm into the cradle	

ROCKER with Adjustment Screw

Hardware for this section:
M3x12 BH (2) - rocker adjustment screws

Rocker & Cradle	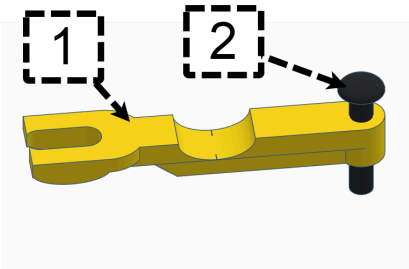
PARTS	1. Rocker 2. M3x12 BH Screw
Assembly STEPS:	
1	Install M3x12 BH through rocker end
3	Repeat for second rocker

FRONT ASSEMBLY (Arm, Hub, Rocker & Cradle)

Front Arm, Rocker, and Hub	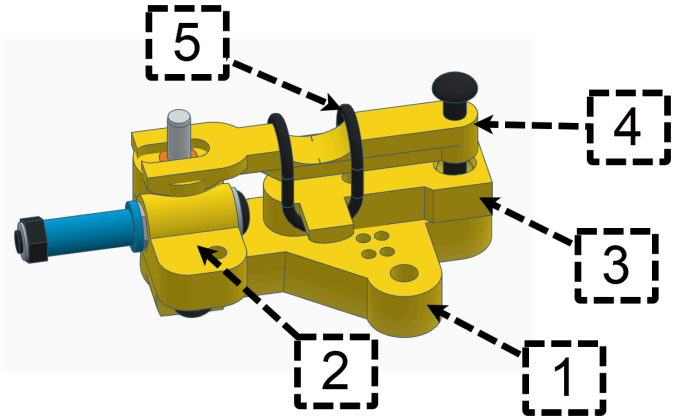
PARTS	1. Front Arm 2. Hub Assembly 3. Cradle 4. Rocker with adjustment screw 5. RB - 1 shown but use 3 to start
Assembly STEPS:	
1	Apply a thin layer of Kyosho 15k grease to kingpin
2	Slide hub onto kingpin (take note of left and right hubs)
3	Place rocker with adjustment screw on top of hub as shown. The rocker adjustment screw sits in the pocket on the cradle.
4	Install RB as seen in image (start with 3 RB and adjust number as needed for track tuning)
5	Repeat for right side

FRONT ARM ASSEMBLY to CHASSIS

Hardware for this section:

M4x12 FH (4) - arms to chassis
M3x16 BH (2) - toe links to hubs

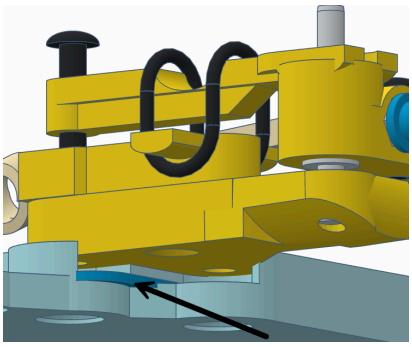

Front Ride Height Shim Placement, start with the 2 dot shim.

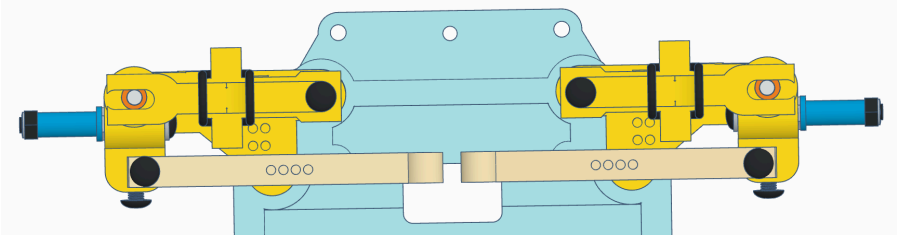

Attach front arms to chassis using M4x12 FH screws, 2 per arm, from bottom of chassis

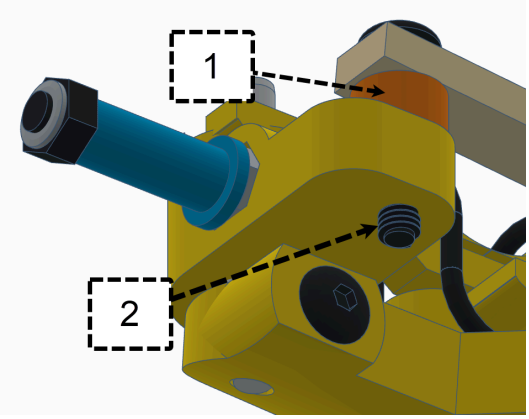

Attach toe links to hubs using M3x16 BH screw as shown with the bump shim (#1) between the toe link and the hub. DO NOT tighten; bottom of the screw should protrude only 2mm below the bottom of the hub (#2).

SERVO SAVER

Hardware for this section:
M3x6 BH (2)
M3x5.5x7 TB (2)

<table>
<tr><td>1. Servo Saver
2. M3x6 BH (2)
3. M3x5.5x7 TB (2)</td><td colspan="2"> 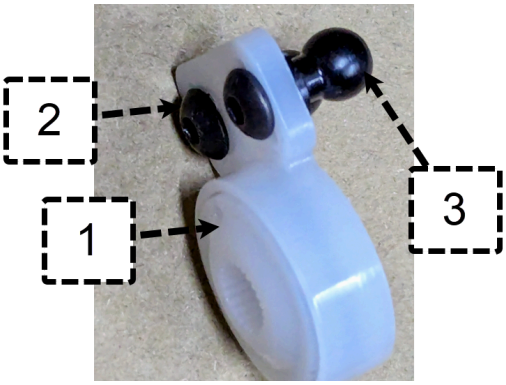
</td></tr>
<tr><td> 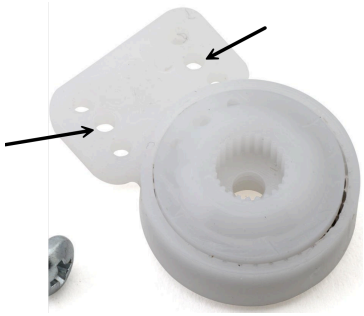
IMAGE #2</td><td> 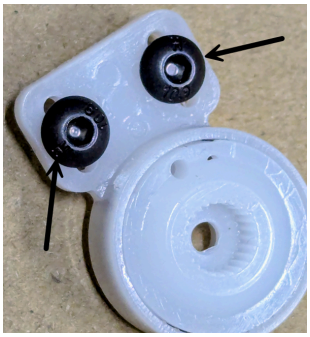
IMAGE #3</td><td>
IMAGE #4</td></tr>
</table>

1. Drill the center (closer together) pair of holes using a 7/64 drill bit (image #2)
2. Thread M3x6 BH (2) into drilled holes as shown (image #3)
3. Thread M3x5.5x7 TB onto each of the M3 screws and tighten (image #4)

FRONT BODY POST MOUNT

Hardware for this section:
M3x30 FH (2)

1. Front Body Post Mount 2. Front Body Post Riser 3. M3x30 FH (2)	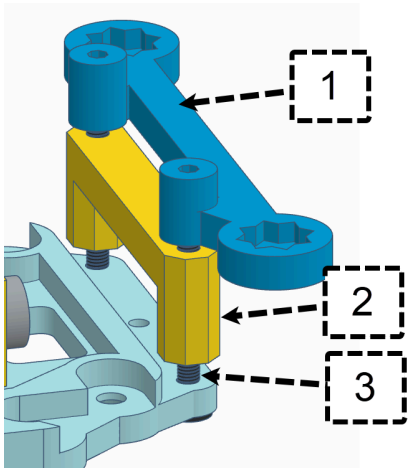

M3x30 FH (2) - through chassis, through front body post riser, into front body post mount
NEED IMAGES

SERVO, SERVO KEEPER

Hardware for this section:
M3x16 FH (2) - through chassis, into servo keeper
M3x10 BH (1) - servo saver to servo

1. Servo Keeper 2. Servo 3. M3x16 FH (2)	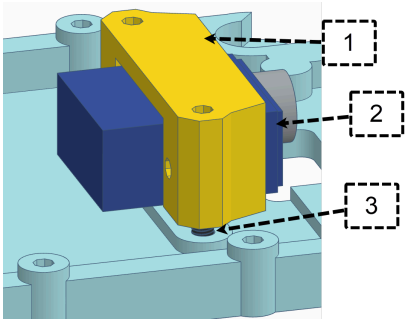

STEPS:
1. REMOVE THE WRAP-AROUND LABEL FROM SERVO
2. Slid the servo into the servo keeper as shown
3. Attach servo keeper with servo to the chassis using 2 M3x16 FH screws through the bottom of the chassis and up into the servo keeper.

SERVO SAVER TO SERVO

1. Servo Saver Assembled 2. Servo 3. Servo Keeper 4. Servo Bushing 5. M3x10 BH (not shown) holds servo saver onto the servo	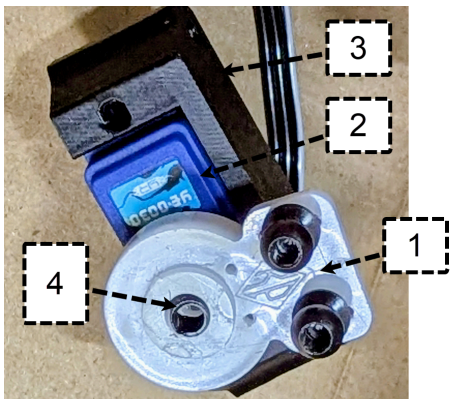

STEPS:
1. Center the servo using your radio with EPA = 100. TRIM=0 and SUB-TRIM = 0 (centered)
2. Install servo saver onto the servo as shown, getting it as close to the center position as possible.
3. Secure the servo horn to the servo using a M3x10 BH screw.
4. Use Sub-Trim feature on radio to get servo horn perfectly centered

SIDE LINKS

Hardware for this section:
M3x5.5x7 BT (4)
M3x25 BH (2)
M3x16 BH (2)
RB (6)

M3x5.5x7 BT (4) - ball tube, 2 per side link
M3x25 BH (2) - side links (rear) - through lower spindle, through BT in end of side link, into POD
M3x16 BH (2) - side links (front) - through BT in other end of side link, into CHASSIS
RB (6) - install 3 RB per side from lower spindle to upper spindle on side arm

CENTER LINK

Hardware for this section:
M3x10 BH (6)
M3x5.5x7 TB (2)

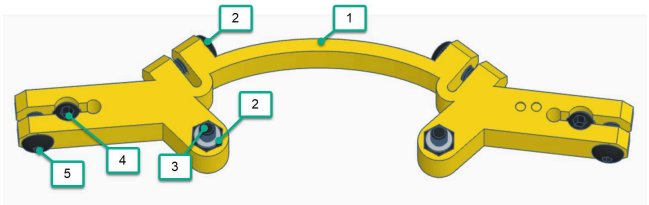

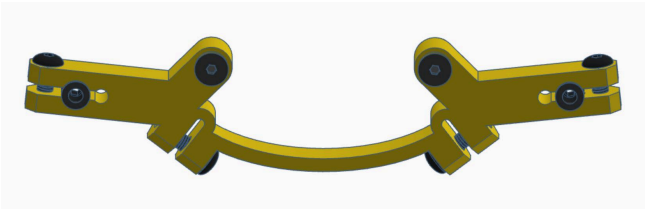

1. Center Link
2. M3x10 BH (2) - center link droop adjuster (do NOT tighten)
3. M3 NyLoc (2) - damper post (no longer used)
4. M3x10 BH (2) - damper post
5. M3x5.5x7 TB (2) - pivot ball ends
6. M3x10 BH (2) - pivot ball tension (tighten carefully to just take slack out of the ball movement)
7. REPEAT 2-6 on other end

DAMPERS (3)

Hardware for this section:
M3x5.5x7 TB (6)
3x25 SP (3)
M3x8 BH (3)

Damper	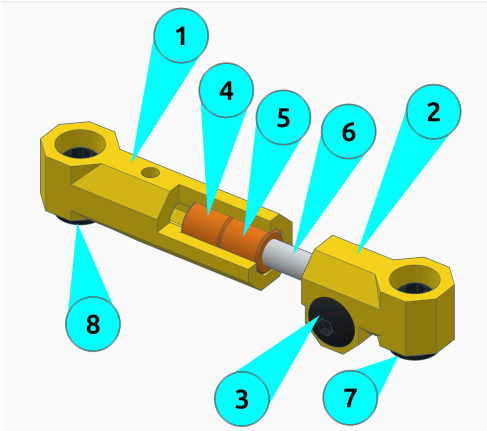
PARTS	1. Cannon 2. Plunger 3. M3x8 BH 4. M3x5x5 SB 5. M3x5x5 SB 6. M3x25 SP 7. M3x5.5x7 TB 8. M3x5.5x7 TB
Assembly STEPS	
1	Press SP (#6) into Plunger (#2) - 16-17mm should protrude when fully inserted
2	Thread BH (#3) from side as shown to secure SP. (MUST BE THE SIDE AS SHOWN)
3	Press 2 SB (#4 & #5) into Cannon (#1) to flush as shown
4	Press a TB (#7) into Plunger (#2) as shown
5	Press a TB (#8) into Cannon (#1) as shown
6	Partially fill cavity inside Cannon (#1) with 15k grease as damping
7	Slide the two halves together. Wipe away any excess grease.
8	Adjust amount of grease as needed to perform without popping, slack, or seal locking
9	Repeat steps 1-8 for other dampers

BODY POSTS

Hardware for this section:
M3x10 BH (2) - front (short) body posts (install so body clip holes are side-to-side)
M3x10 BH (2) - rear (long) body posts (install so body clip holes are front-to-back)

BODY POST EXTENDER POSTS

Hardware for this section:
BH M3x10 (2) - front (short) body posts (install so body clip holes are front-to-back)

BODY POST SET:

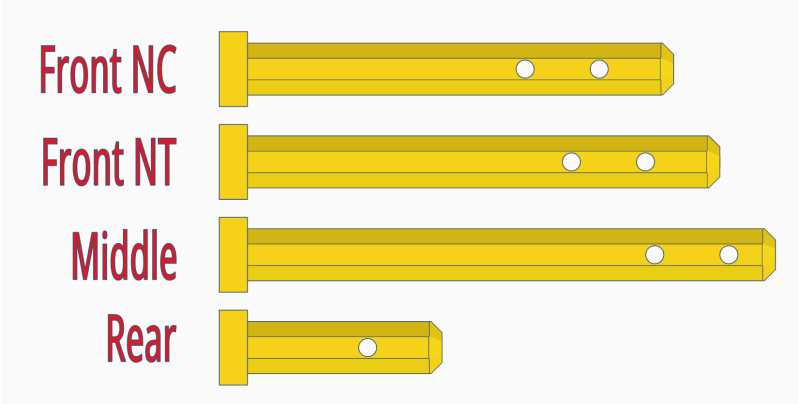

Front NC	49mm
Front NT	54mm
Middle	60mm
Rear	24mm

BODY POST EXTENDER POSTS & SLEEVES

NOTE: Truck Body requires 2 additional holes to be drilled for Posts #2 shown below.

1. Add Sleeve Bases, Sleeve Tubes, & Sleeve Caps (TPU), as shown below depending on NASQAR body or NAS-TruQ body.
2. For NASQAR, add Body Clip (angled downward) to top of post #2 before placing body on posts

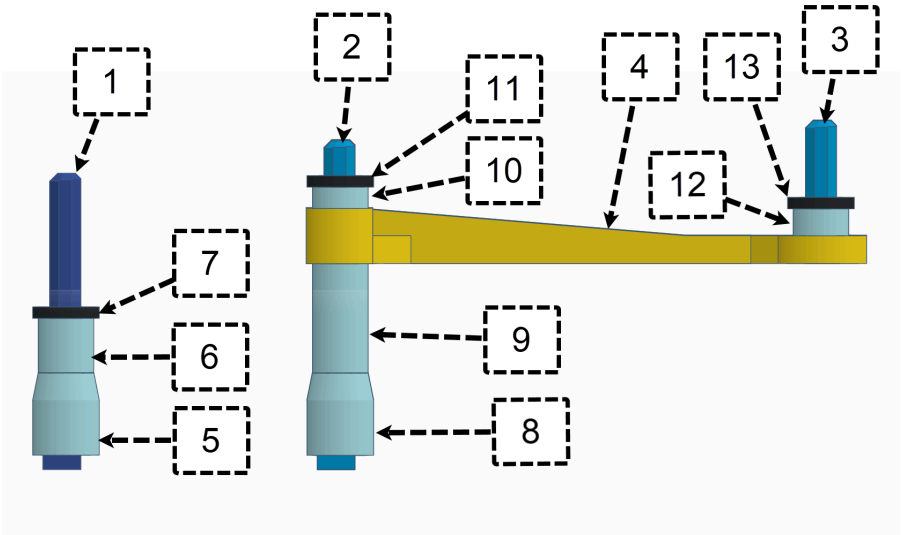

ITEM #	DESCRIPTION	NASQAR	NAS-TRUQ
1	Front Body Post	49mm	54mm
2	Middle Body Post	60mm	60mm
3	Rear Body Post	24mm	24mm
4	Body Post Extender	124NC-19E	124NC-19E
5	Sleeve Base	15mm	15mm
6	Sleeve Tube	15mm	2 x 10mm
7	Sleep Cap (TPU)	2mm	2mm
8	Sleeve Base	15mm	15mm
9	Sleeve Tube	2 x 10mm	2 x 10mm
10	Sleeve Tube	4mm	NA
11	Sleep Cap (TPU)	2mm	2mm
12	Sleeve Tube	5mm	5mm
13	Sleep Cap (TPU)	2mm	2mm

FRONT WIRE KEEPER

Hardware for this section:

1) BH M3x8 (2) - front wire keeper to chassis

1. Use the M3x8 (2) screws (not shown) to fasten the Front Wire Keeper to the chassis after neatly wrapping/folding the excess servo wire under the keeper.	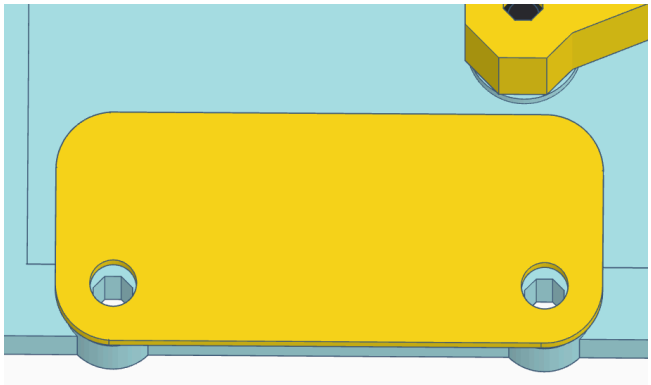

SIDE WIRE KEEPERS & BATTERY KEEPERS

Hardware for this section:

M3x16 BH (2)
M3x8 BH (2)

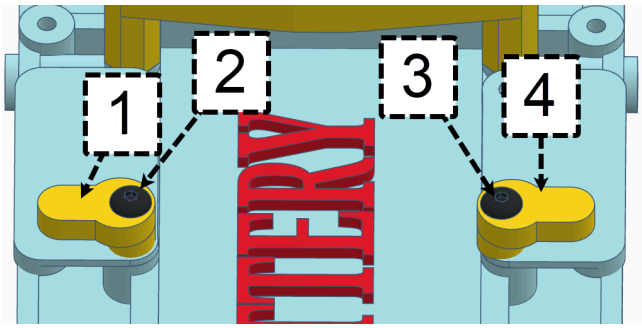	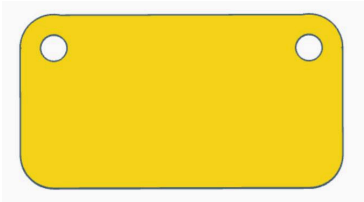

1. Battery Keeper
2. M3x16 BH - rear of side wire keeper
3. M3x16 BH - rear of side wire keeper
4. Battery Keeper
5. 12-64 Side Wire Keeper
6. M3x8 BH (2) - front of side wire keeper (not shown above)

MOTOR MOUNTING

M3x8 BH (1) - motor upper hole
M3x0.5 FW (1) - motor upper hole
M3x16 BH (1) - motor lower hole

M3x12 FW (1) - motor lower hole

REAR WHEEL MOUNTING
M3x10 CHR (6) - use 3 CHR per side to mount rear wheels

OTHER INFO

RECOMMENDED PARTS

- BittyDesign Ares-1 GT12 Body
- Kyosho #96504 15k Diff. Gear Grease

TUNING OPTIONS & MORE

- 12-41 Center Link (soft)
- 12-42 Center Link (medium, included in kit)
- 12-43 Center Link (hard)

REQUIRED FOR COMPLETION: (not included)

- Battery
- Motor
- Front Tires
- Rear Tires
- Body
- Pinion Gear
- Radio System
- ESC