The Team QIK Racing

105-10 WASP CHASSIS

(see https://teamqik.com/racing for CLASS RULES and MORE)

By Lynxtuff *Lynxtuff.com*

Assembly Instructions (24.01.01.01)

CONTENTS: (image is incomplete… need shock tower images added)

105-20 Anti-Wasp Chassis Kit
1) 105-21 Chassis
2) 105-01 vertical Receiver Plate

9026-20 Battery Stay Set

0201-10-70 Front Shock Tower Kit 70mm
0201-20-80 Rear Shock Tower Kit 80mm
0201-40 Wing Mount Kit

YR-BBG-0070BU - Front Shocks
YR-BBG-0080BU - Rear Shocks

105 TRX DONOR Parts Kit
105 TRX Tranny (current option)
or QIK-203-10 1-gear Tranny Kit (future option)

Screw Set: (All inclusive,includes hardware for sub-kits)

M3 Button Head Screws:
M3x8 BH (1)
M3x12 BH (2)
M3x14 BH (2)
M3x16 BH (6)
M3x20 BH (2)
M3x25 BH (8)
M3x30 BH (4)

M3 Flat Head Screws:
M3x12 FH (5)
M3x20 FH (2)
M3x40 FH (2)

M3 Washers & Nuts:
M3 Fender Washer (10)
M3 Washer (2)
M3 NyLoc Nut (4)

M4 Flat Head Screws:
M4x10 FH (7)
M4x12 FH (2)

Top Deck
(use stock top deck)

Steering
(use stock steering setup)

Servo
(use stock setup)

0201-00-70 Front Shock Tower Kit 70mm
0201-03 Front Shock Tower 70mm
M3x16 BH (2) (shock tower to bulkhead)
M3x16 BH (2) (shock bottom to a-arm mounting screw)
M3x30 BH (2) (shock top mounting screw)
M3x14 BH (2) (camberlink to shock tower)
0201-02 Shock Bushing, Lower Front (2)
0201-02 Shock Bushing (2) (spares)
0201-01-12 Shock Top Mounting Spacers 8mm (2)

TRX Tranny
(use traxxas stock transmission)

0201-10-80 RM Rear Shock Tower Kit 80mm
0201-11 MM Rear Shock Tower 80mm
0201-12 MM Rear Shock Tower Base
0201-01-12 Shock Top Mounting Spacers 8mm (2)
M3x12 BH (2) (base to tranny)
M3x25 BH (2) (tower-base-chassis)
M3 Fender Washer (2) (tower-base-chassis)
M3x30 BH (2) (shock top mounting screw)
M3x20 BH (2) (rear camber link to base)
M3x16 BH (2) (shock bottom to a-arm mounting screw)

0201-40 Wing Mount Kit
0201-41 Wing Mount (2)
0201-42 Wing Mount Washer (2)
M3x12 BH (2) (wing to wing mount)
M3x25 BH (4) (wing mount to shock tower)
M3 Fender Washer (4) (wing mount to shock tower)

ESC/RCV Plate
M3x8 BH (2) (ESC/RCV plate to chassis)

	M3 Nyloc Nut (2) M3 Washer ***Battery Posts*** M3x12 FH (2) (battery post to chassis) M3x12 FH (1) (rear battery post ***9026-20 Battery Stay Assembly*** Battery Stay Twistee Battery Stay Post M3x25 BH (2) (battery stay assembly) M3 Fender Washer (4) M3 NyLoc Nut (2) ***Front Assembly to Chassis*** M3x40 FH (2) (upward thru the chassis-firewall & thru top deck) M3 Fender Washer (2) (on top of top deck) M3 Nyloc Nut (2) (on top of fender washer on top of top deck) M4x12 FH (2) (top front of top deck to front bulkhead) M4x10 FH (3) (bottom front) ***Rear Assembly (tranny) to Chassis*** M4x10 FH (4) (bottom rear) M3x12 FH (2) (bottom rear)

105-20 Chassis Kit (photo id incorrect)

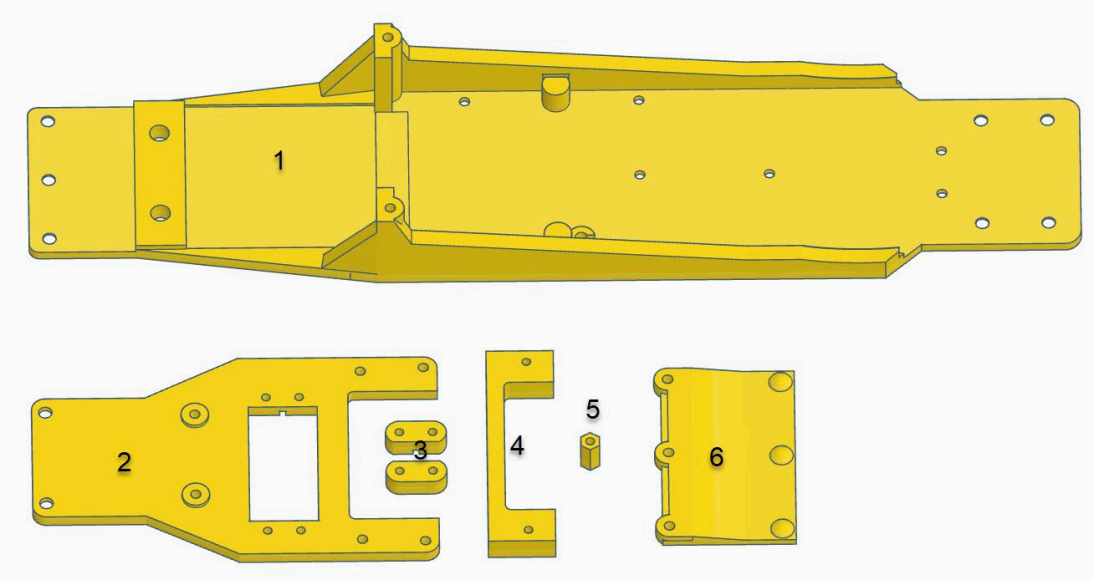

9026-10 Battery Stay Set

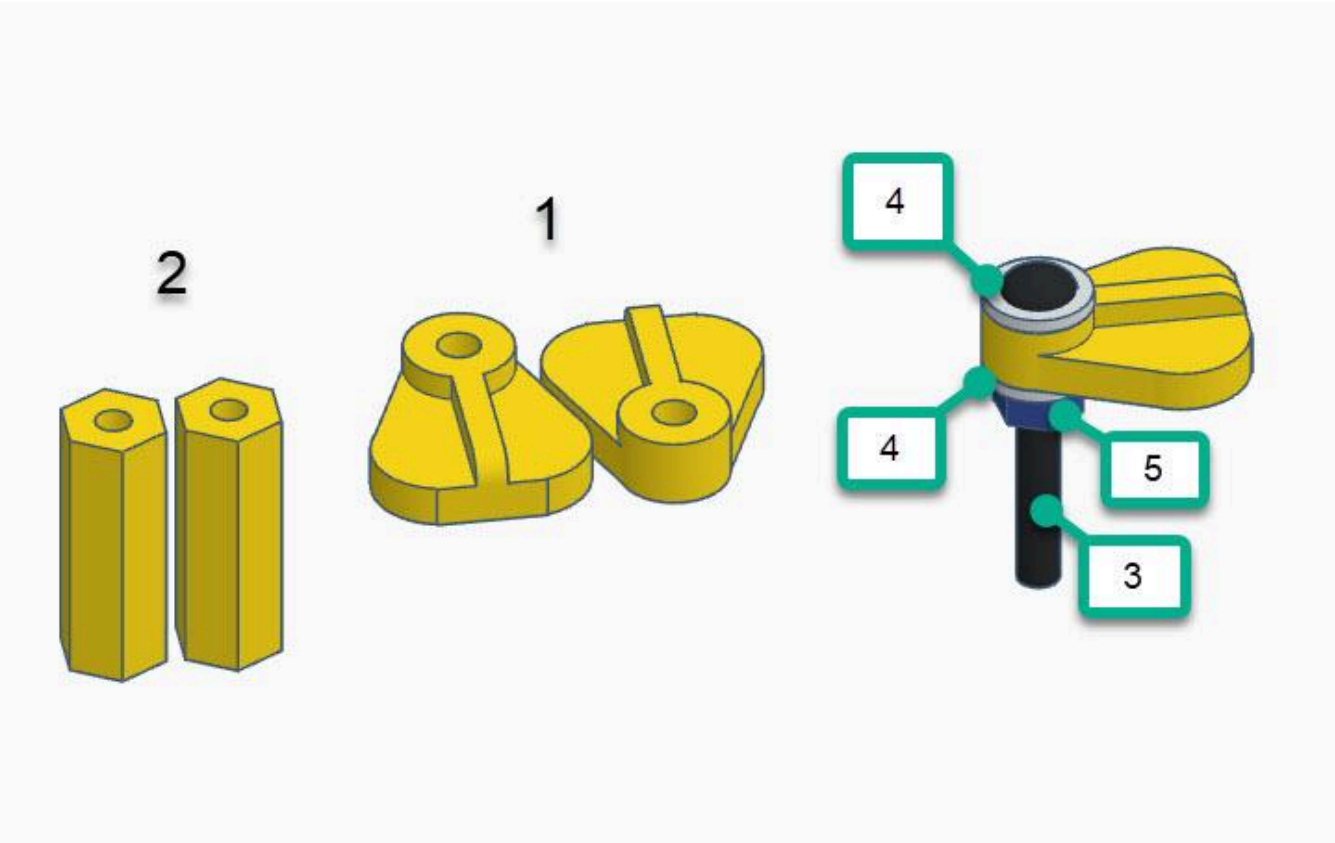
2
1
4
4
5
3

<u>BANDIT CHASSIS SWAP INSTRUCTIONS</u> (needs update for the 105-20)

Bandit FRONT Assembly:

DONOR CHASSIS…

1. Remove the 3 M4 Screws on the bottom at the Front.
2. Remove the 2 M3 screws from the top chassis plate on top of the firewall.
3. FRONT assembly will now come apart from the main chassis.

NOTE: Now is the time to install the Team QIK Racing Front Shock Tower if so desired!

Attach the FRONT assembly to the new 105 CHASSIS…

1. Route the servo wire through the hole in the firewall of the new chassis.
2. Using the screws provided with the Chassis Kit… (DO NOT use the Bandit's original screws).
3. Use 3 M4 x 12 FH screws to attach the front bottom.
4. Use 2 M3 x 16 FH screws to attach the top deck to the fireway of the new chassis.

Bandit REAR Assembly:

DONOR CHASSIS…

Remove the 3 M3 BH screws attaching the rear guard/light mount to the rear of the vehicle and remove guard (if present).
Remove the 4 M4 Screws on the bottom of the rear assembly.
Remove the 2 M3 screws from the bottom of the rear assembly.
Remove the 2 M3 screws from the top of the shock tower closest to the front of the chassis.
REAR assembly will now come apart from the main chassis.

- It may take a little effort and maneuvering to get the REAR assembly up over the bumps on the chassis, but it does come apart.

NOTE: Now is the time to install the Team QIK Racing Rear Shock Tower if so desired!

Attach the REAR assembly to the new 104 CHASSIS…

Using the screws provided with the Chassis Kit… (DO NOT use the Bandit's original screws).

1. Use 4 M4 x 12 FH screws to attach the rear through the bottom of the chassis.
2. Use 2 M3 x 12 FH screws to attach the rear through the bottom of the chassis.
3. Use 2 M3 x 16 BH screws to attach the top of the shock tower to the chassis.

Receiver Plate installation:

1. Attach the Receiver Plate using 2x M3 x 8mm Button Head Screws into the slanted sides/gussets of the rear shock tower support.

Battery Stay Standoff installation:

2. Thread a M3 x 12mm Flat Head Screw through bottom of chassis into the 20mm SQUARE Standoff
3. Repeat for second Battery Stay Standoff

Battery Stay Assembly:

Assemble the Battery Stays (2) as shown below…
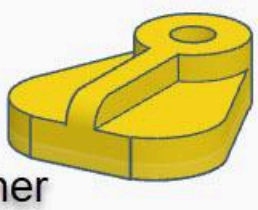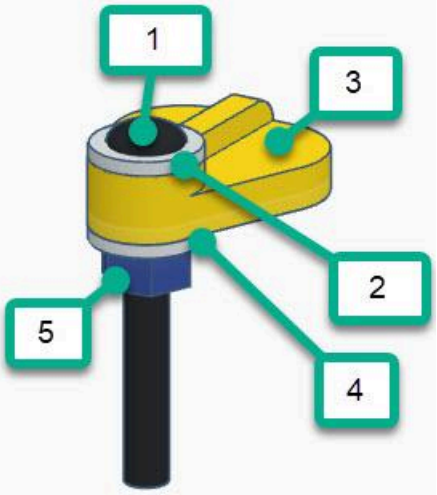
1) M3 BH Screw
2) M3 Fender Washer
3) Battery Stay
4) M3 Fender Washer
5) M3 NyLock Nut
6) Tighten NyLoc Nut so that Battery Stay will twist with some friction on Screw